ONLINE CERTIFICATIONS DIRECTORY

Construction No. 468
TGKX.468
Roof Deck Constructions

Page Bottom

Design/System/Construction/Assembly Usage Disclaimer

- Authorities Having Jurisdiction should be consulted in all cases as to the particular requirements covering the installation and use of UL Listed or Classified products, equipment, system, devices, and materials.
- Authorities Having Jurisdiction should be consulted before construction.
- Fire resistance assemblies and products are developed by the design submitter and have been investigated by UL for compliance with applicable requirements. The published information cannot always address every construction nuance encountered in the field.
- When field issues arise, it is recommended the first contact for assistance be the technical service staff provided by the product manufacturer noted for the design. Users of fire resistance assemblies are advised to consult the general Guide Information for each product category and each group of assemblies. The Guide Information includes specifics concerning alternate materials and alternate methods of construction.
- Only products which bear UL's Mark are considered as Classified, Listed, or Recognized.

Roof Deck Constructions

See General Information for Roof Deck Constructions

Construction No. 468

January 27, 2010

Uplift — Class 90

Fire Not Investigated

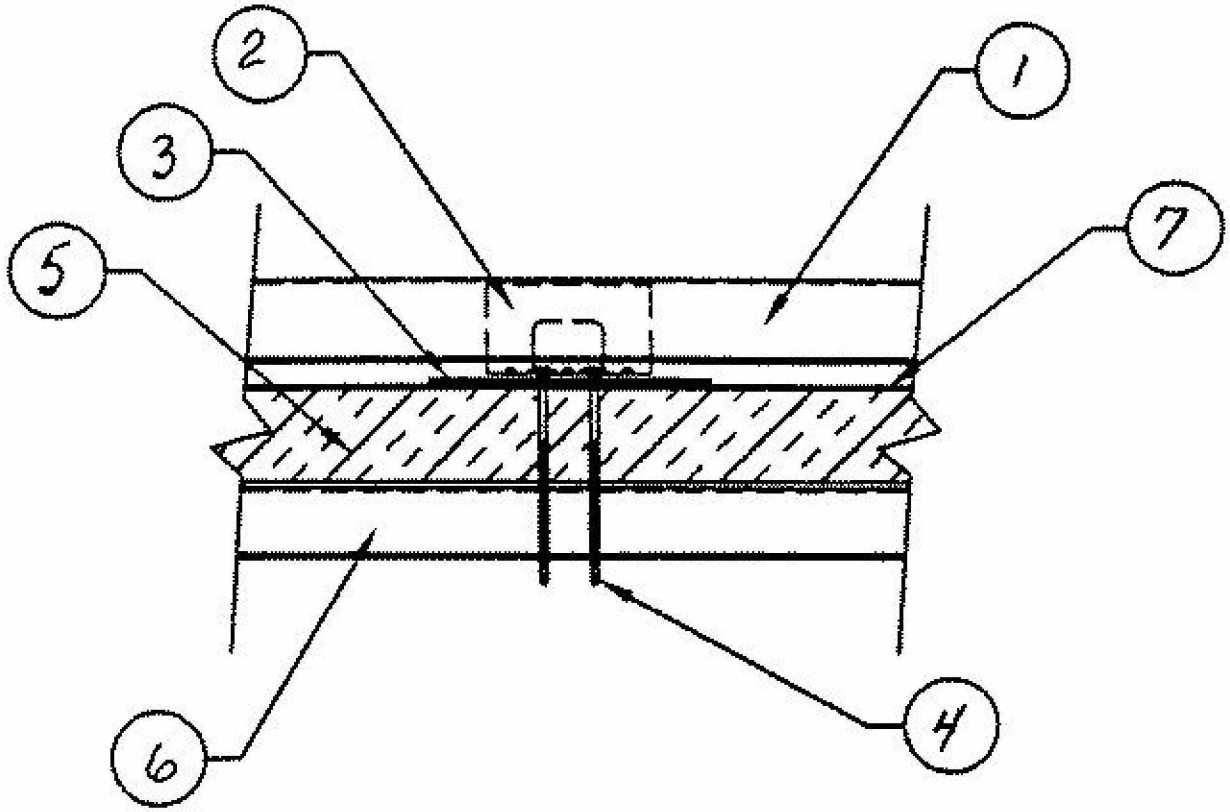

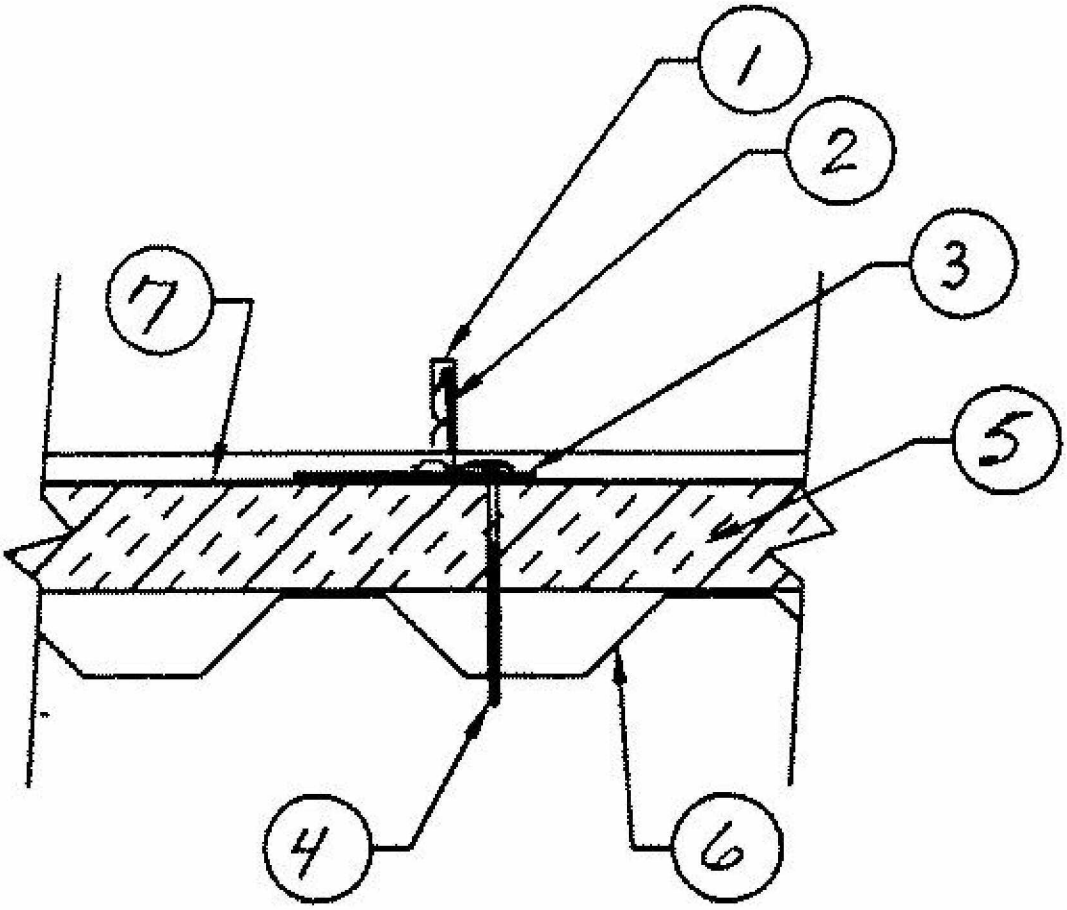

1. **Metal Roof Deck Panels* —** No. 24 MSG min thickness coated steel panels. Panel width 18 in. maximum. Panel ribs to be 1-3/4 in. high. Panels continuous over three or more clips with no end laps.

MCELROY METAL MILL INC (View Classification) — "Medallion-Lok" or "Metalogic-2000

2. **Roof Deck Fasteners* (Panel Clips) —** One piece assembly, No. 18 MSG min thickness, 3-1/2 in. wide, 1-7/8 in. high. Clip spacing to be 48 in. OC. Clips to interface with Item 3 bearing plate.

MCELROY METAL MILL INC (View Classification) — "Medallion-Lok Clip"

3. **Bearing Plate —** One piece assembly, No. 18 MSG in thickness steel, 3-7/8 in. wide, 6 in. long. (50,000 psi min yield strength).

4. **Panel Fasteners — (Screws) —** Fasteners used to attach panel clips and bearing plates (Items 2 and 3) through rigid insulation and into light gauge steel deck (Item No. 6) to be No. 14 dia. with Phillips or square drive head, self-drilling steel screws. Two screws per clip to be used, inserted through 1/4 in. diam guide holes. Length of screws based on overall insulation thickness (4 in. max) plus metal deck depth.

5. **Foamed Plastic — (Rigid Insulation) —** Min thickness 1 in., max thickness 4 in. Density to be a min of 2 pcf. As an alternate, 7/16 in. thick oriented strand board (OSB) may be placed on top of the rigid insulation provided combined thickness of OSB and rigid insulation does not exceed 4 in. max.

6. **Liner Panel —** Min thickness No. 22 MSG. Coated steel (33,000 psi) min yield strength, min depth 1-1/2 in., fabricated to various profiles.

7. **Underlayment —** One ply of 30 lb roofing felt or one layer of bituminous resin type water proofing membrane.

8. **Supports (Not Shown) —** Used to support liner panels, spaced per deck manufacturer's specifications.

The following items may be used in conjunction with the "Medallion-Lok" Metal Roof Deck Panels (Item 1).

A. **Batten Clips* —** Slipped over ribs formed by roof deck panels. One piece assembly, 1-3/4 in. high, 1-3/4 in. max width, with four legs and two arms. Formed to engage ribs of "Medallion-Lok" Panels and Batten Cap (Item B). Clips spaced 48 in. OC.

MCELROY METAL MILL INC (View Classification) — "Medallion-Lok Batten Clip"

B. **Batten Cap* —** Slipped over batten clip. Two inches high, 1-1/2 in. wide at top with sides formed to engage batten clip (Item A). Snapped over batten clips.

MCELROY METAL MILL INC (View Classification) — "Medallion-Lok Batten Clip"

Refer to General Information, Roof Deck Construction (Roofing Materials and Systems Directory) for items not evaluated.

*Bearing the UL Classification Mark

Last Updated on 2010-01-27

© 2012 UL LLC

The appearance of a company's name or product in this database does not in itself assure that products so identified have been manufactured under UL's Follow-Up Service. Only those products bearing the UL Mark should be considered to be Listed and covered under UL's Follow-Up Service. Always look for the Mark on the product.

UL permits the reproduction of the material contained in the Online Certification Directory subject to the following conditions: 1. The Guide Information, Designs and/or Listings (files) must be presented in their entirety and in a non-misleading manner, without any manipulation of the data (or drawings). 2. The statement "Reprinted from the Online Certifications Directory with permission from UL" must appear adjacent to the extracted material. In addition, the reprinted material must include a copyright notice in the following format: "© 2012 UL LLC".